206268 - MM espagnolette central with tilt stay BS 15 1000 with 2 i.S. SRW 650-1.000 silver

Technical drawing

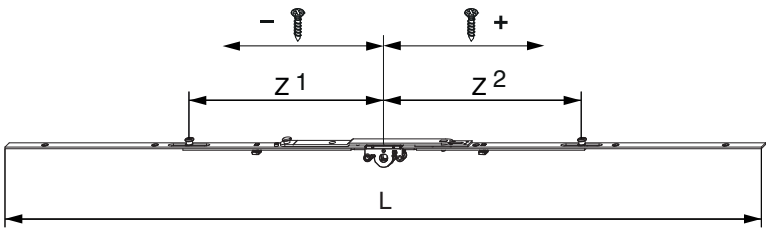

		L			№
silver	1.000	1.000	15	20	206268[1) 2)]

[1)] One mounted tilt stay.

[2)] The MACO product liability stipulates the additional use of a restrictor and cleaning stay. Note the max. sash weight for the restrictor and cleaning stay.

Screw position table

№		1	2	3	4	5	6	7	8	9	10	11	12	13
206268	6	-450	-304	-70	120	304	450							

Cam position table

№		Z1	Z2	Z3	
206268	2	-260	260		

Gearbox dimensions

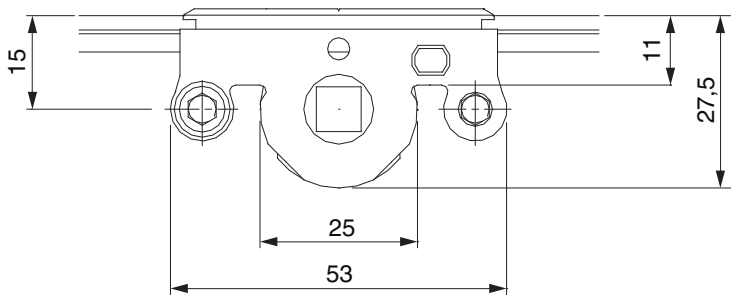

- Routing width 12 mm for drive gear box
- Use SPAX screw with Ø 5 mm or M5 screw to fasten the handle.

Drilling hole pattern

For timber windows

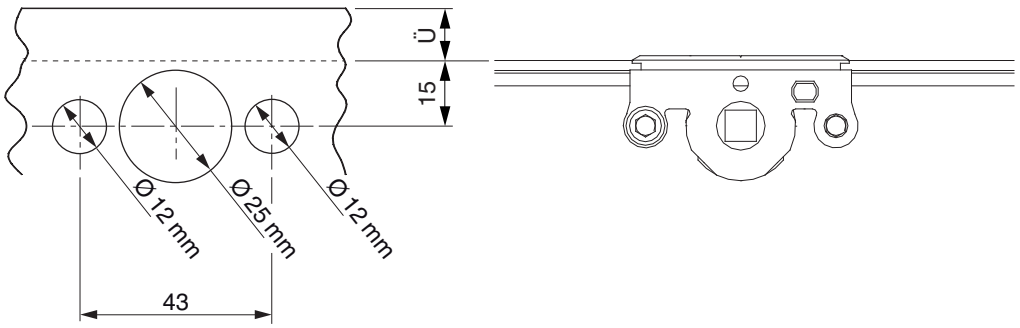

For PVC and aluminium windows

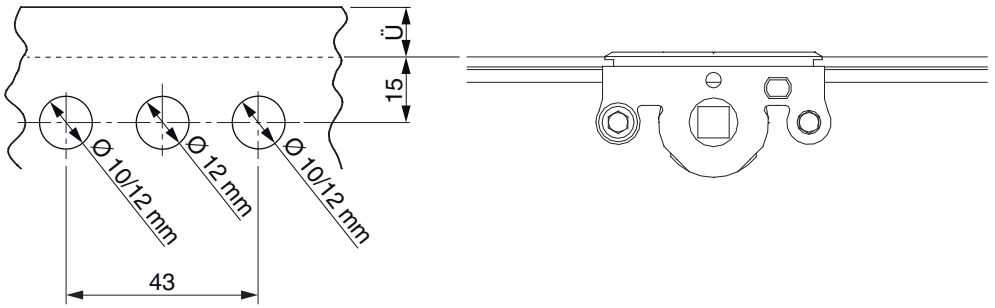

tilt stay

tilt stay

Installation

1. Cut the tilt-only stay arm to the sash rebate width and fasten. CAUTION: is centre-fastened in the tilt position!
2. Transfer the notch on the tilt-only stay arm to the cover frame. Mount the striker for the tilt-only stay arm with notch at this position.

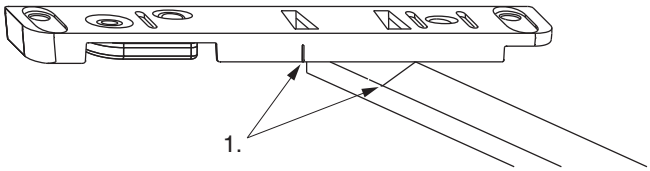

1. Notch

Hinge

1. When inserting, bring the window handle to the cleaning position (Fig. 2, C).
2. Open the security disc on the tilt-only scissor stay casing (Fig. 1) and insert the scissor arm.
3. Bring the window handle to its tilt position (Fig. 2, B) and close the security plate again (Fig. 3).

Fig. 1

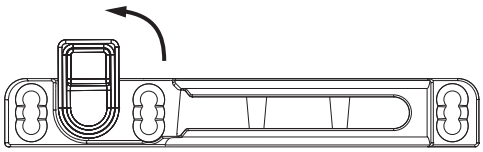

Fig. 2

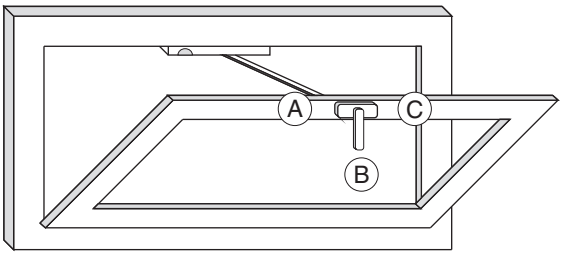

- A: Close
- B: Tilt
- C: Clean

Fig. 3

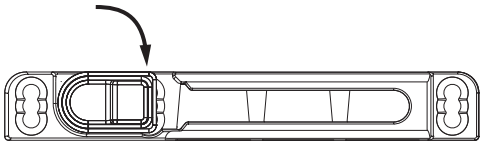

Unhinge

1. When unhinging in tilt position, open the security disc (Fig. 1).
2. Close the sash, bring the handle to cleaning position (Fig. 2, C) and open the sash.

206268 - MM espagnolette central with tilt stay BS 15 1000 with 2 i.S. SRW 650-1.000 silver

Espagnolette - fixed handle height

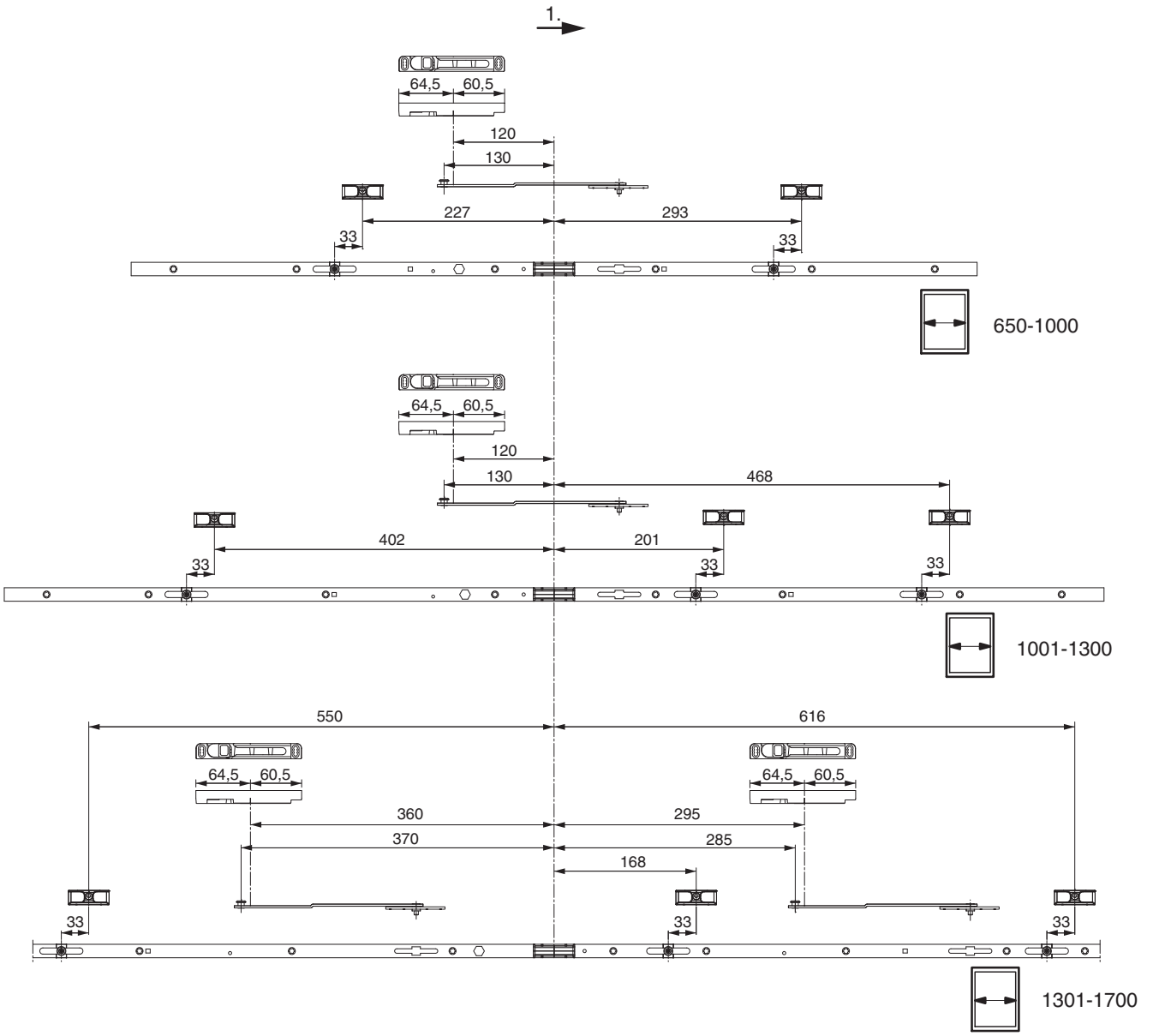

1. Locking direction

Correct installation position

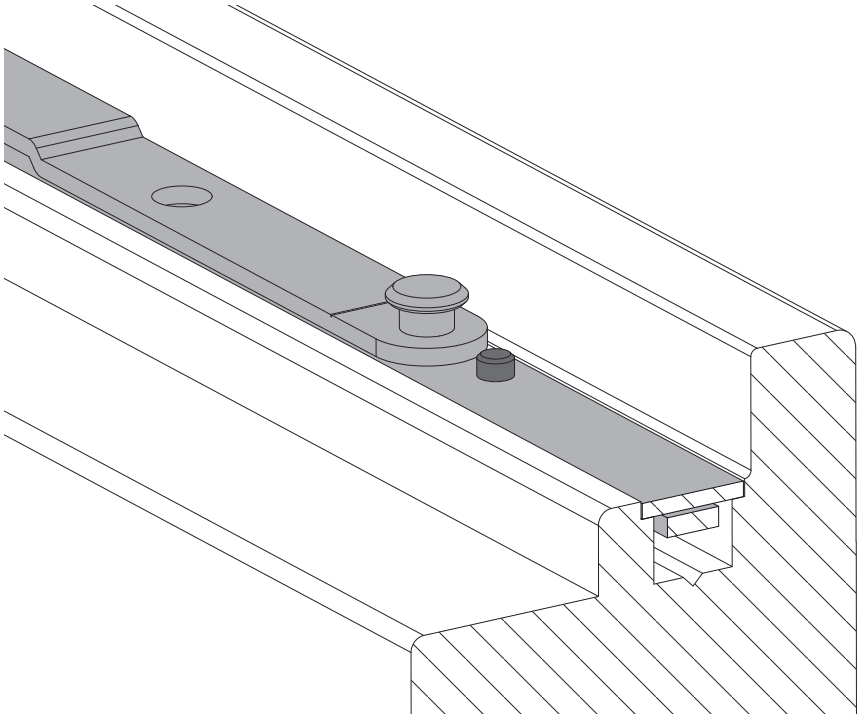

Gasket compression adjustment
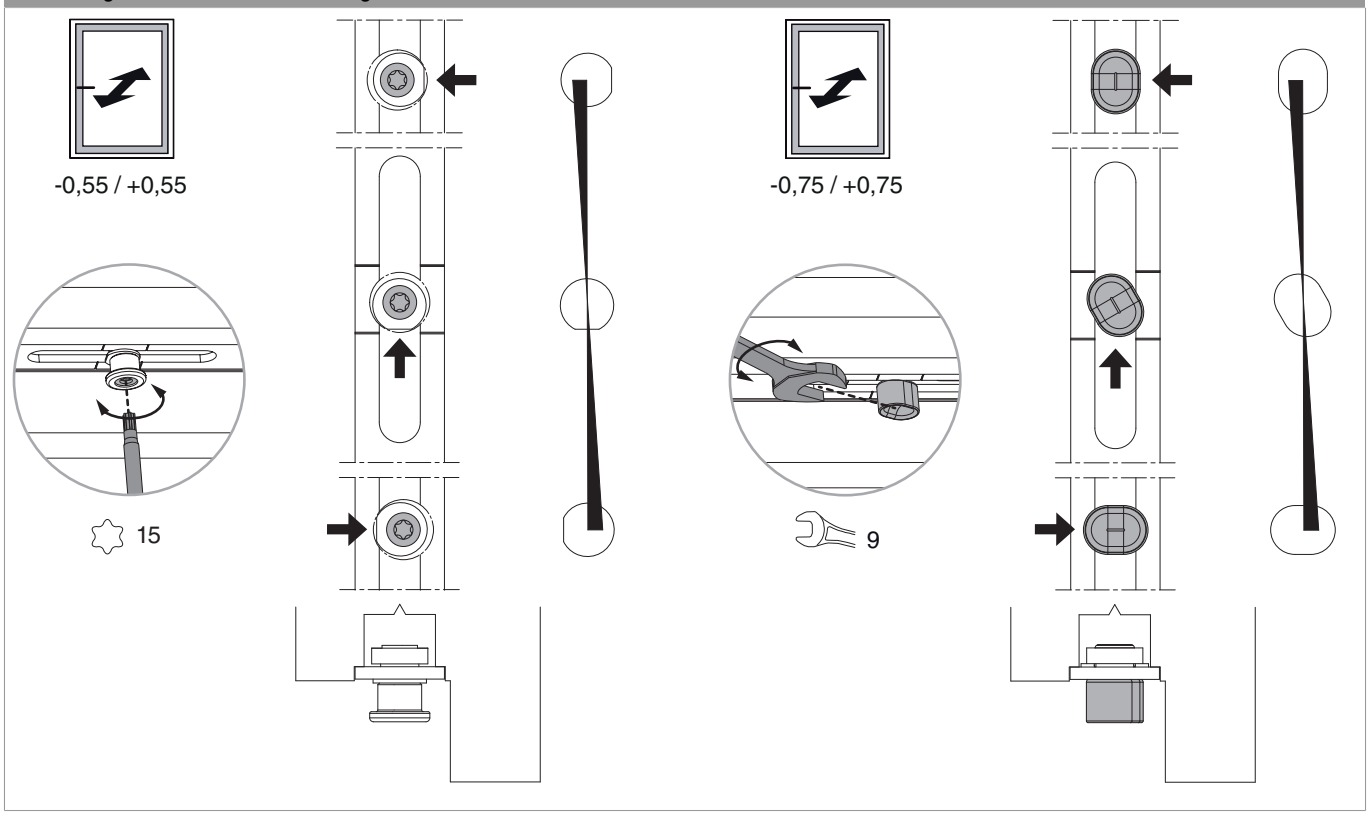
i.S. locking cams and standard locking cams